Richards MANUFACTURING CO.
517 Lyons Ave, Irvington, NJ 07111
Phone: 973-371-1771
Fax: 973-371-4304
www.richards-mfg.com

Product Family
CS8

Installation Instructions

CS8 Series | Cold Shrink R-800

Applicable Fastener Type
G Style

Applicable Voltage Classes
15kV | 25kV

Applicable Catalog Prefix

15kV Class	25kV Class
61CS8G	62CS8G
71CS8G	72CS8G
91CS8G	92CS8G

Applicable Housing Sizes

O	P	Q
Minimum Insulation Diameter = 0.725”	Minimum Insulation Diameter = 0.990”	Minimum Insulation Diameter = 1.268”

For Use With the Following Cable Types
Jacketed Concentric Neutral (JCN)
Longitudinally Corrugated Neutral (LC)
Tape Shield Neutral



Scan QR code to watch installation video

WARNING

- System must be de-energized during installation or future operation of this product or its components.
- Do not touch or move energized connectors or components by hand.
- Excess distortion of the assembled connector may result in its failure.
- Failure to follow these instructions will result in damage to the connector and serious or fatal injury.
- This product should only be installed and/or operated by trained personnel in accordance with normal and safe work procedures.
- Variations in equipment or configuration or work procedures may not be covered in these instructions.
- Please contact Richards Manufacturing for any additional questions.

Guidelines for Installation in Cold Temperatures (<32°F):

- The cold shrink product must be kept and stored in a clean, dry manner. These high voltage cable accessories have internal phase to ground insulating interfaces which must be intact.
- Keep product within a warmer climate controlled environment as long as possible PRIOR to installation. This may be the cab of an operating vehicle if no other facility resources are available.
- If product has been inadvertently exposed and stored in freezing (or below) temperatures for an extended or unknown period of time: Product must be warmed (41°F or greater) and inspected prior to installation.
- If installing product in temperatures below freezing and conducting post installation electrical testing, it may be necessary to warm the cable interface of the accessory. This can increase the contact pressure between the cable accessory and the cable substrate. The heat should be applied primarily around the cable semicon shield cutback area. This can be accomplished via a space heater or hot air gun. The cable accessory should be gently heated so that the product becomes warm to the touch. Heat should not be concentrated but should be applied circumferentially around the product. If using a hot air gun, care must be taken not to apply the heat in a concentrated manner that could damage the cable or accessory. Check that proper ventilation is available if working in a confined space or structure.

KIT CONTENTS

Standard kits may include the following. Custom kits may vary.
Check package contents to be sure they are complete, undamaged, and properly sized for the application.



Insulating Cap
21LBICG (for 15kV Class)
22LBICG (for 25kV Class)

G Style Cold Shrink R-800 (CS8)
(15kV or 25kV)

Shear Bolt Lug
P6ALR-X-$^{15}/_{16}$

OR

$^{15}/_{16}$ Threaded Hole Lug
P6AL-X-$^{15}/_{16}$
P7ALCU-X-$^{15}/_{16}$
P9CU-X-$^{15}/_{16}$

(1) Cable Prep Pack containing:



Silicone Lubricant
P6SL1

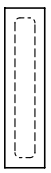

Jacket Mastic
(1) Piece

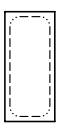

Sealing Mastic
(1) Piece



Stress Control Mastic
(1) Piece



Latex Gloves
(1) Pair



Stud
P625HIP-STUD
P925HIP-STUD

TIP: Use To-Scale Cable Cutback Template as aid to prepare cable.
NOTE: Certain items used, such as PVC tape, may not be included.

1 Positioning Cable & Exposing Metallic Shield

A. Straighten and train cable end. Cable should be free to move approximately 2" in either direction.
B. Cut cable to dimensions shown.
C. Clean cable jacket approximately 24" from end of cable.

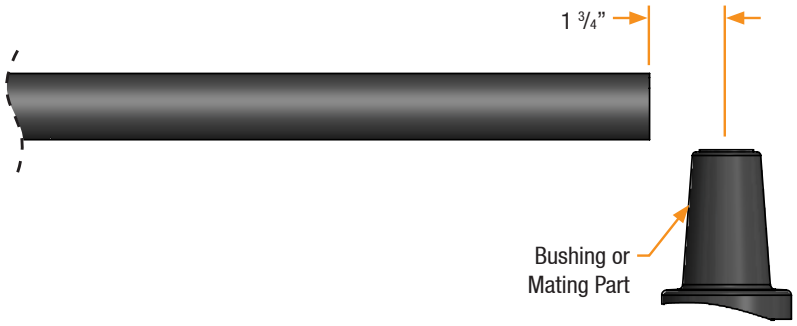

For Strap/Wire Shielded Cable

D. Remove cable jacket to dimensions shown.
E. Abrade area as shown.

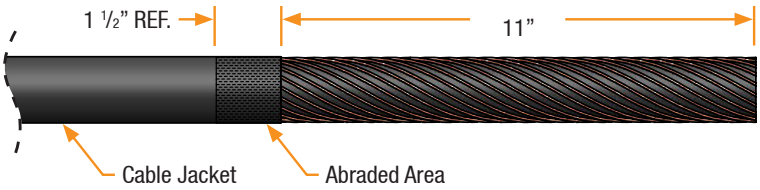

For Metallic Tape/LC Shielded Cable

D. Remove cable jacket to dimensions shown.
E. Abrade area as shown.

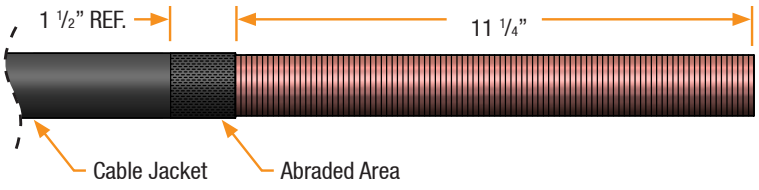

2 Applying Jacket Mastic

For Strap/Wire Shielded Cable

A. Apply one piece of **jacket mastic** at position shown by stretching and wrapping with light tension fully around outer jacket.

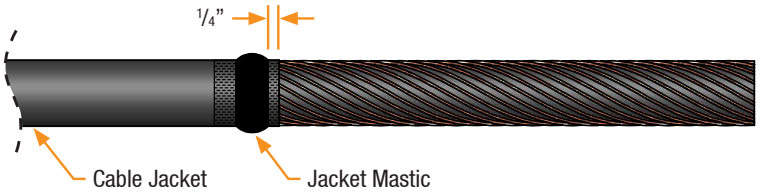

For Metallic Tape/LC Shielded Cable

Go to Step 3

NOTE: Jacket mastic will be applied in Step 10.2

3 Exposing Cable Semi-Conductive Shield

For Strap/Wire Shielded Cable

A. Fold back strap/wire shields and press firmly into jacket mastic.
B. Secure strap/wire shields 3” back from jacket mastic with binding wire or zip tie as shown.

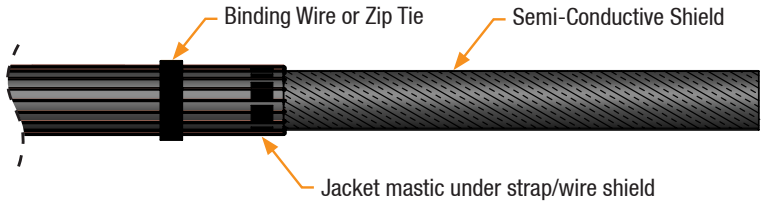

For Metallic Tape/LC Shielded Cable

A. Wrap 2 layers of PVC tape at dimension shown to secure metallic shield.
B. Remove metallic shield up to PVC tape as shown.

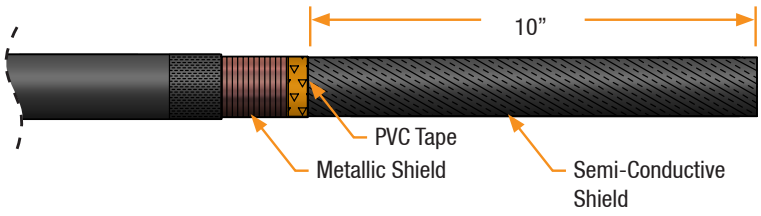

4 Exposing Cable Insulation

For Strap/Wire Shielded Cable

A. Remove semi-conductive shield to dimension shown.

WARNING: Do not nick or cut the cable insulation.

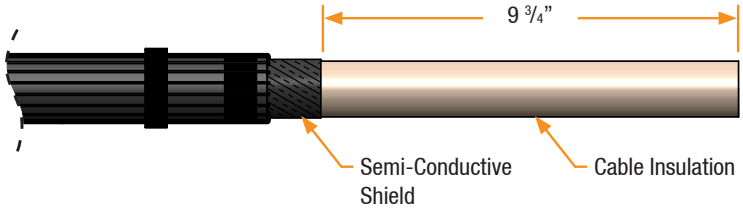

For Metallic Tape/LC Shielded Cable

A. Remove semi-conductive shield to dimension shown.

WARNING: Do not nick or cut the cable insulation.

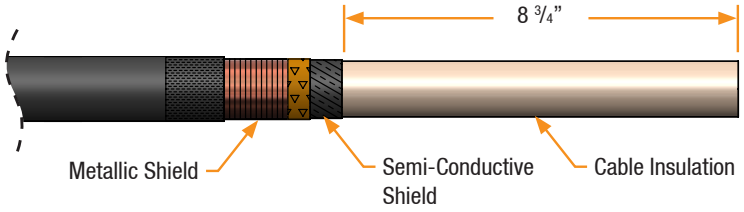

5 Exposing Conductor

A. Remove cable insulation. Refer to instructions provided with lug for insulation cutback dimension. Cutback dimension should not exceed 4 3/8".

WARNING: Do not nick or cut the conductor strands.

Insulation Cutback

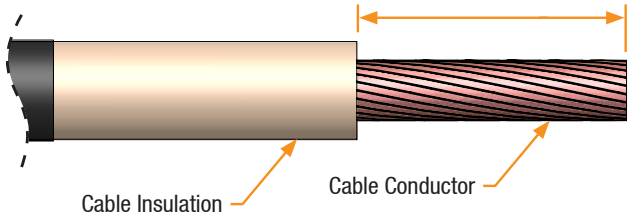

NOTE: Confirm all dimensions with To-Scale Cable Cutback Template before proceeding.

6

Installing Lug

WARNING: Lug MUST have a $^{15}/_{16}$" hole. Confirm lug and hole dimension before installing lug.

For Crimp Connectors

A. Clean conductor of any debris. For aluminum conductor, wire brush and immediately insert lug onto conductor. Slide lug until the conductor is fully seated within the lug barrel.
B. Rotate lug so that spade is parallel to the contact face of the bushing or mating part as shown.
C. Select correct tool and die using crimp chart supplied with lug. Crimp lug (min. number indicated in crimp chart) starting just below knurl line adjacent to pad. Carefully wipe any excess inhibitor from lug and cable insulation.

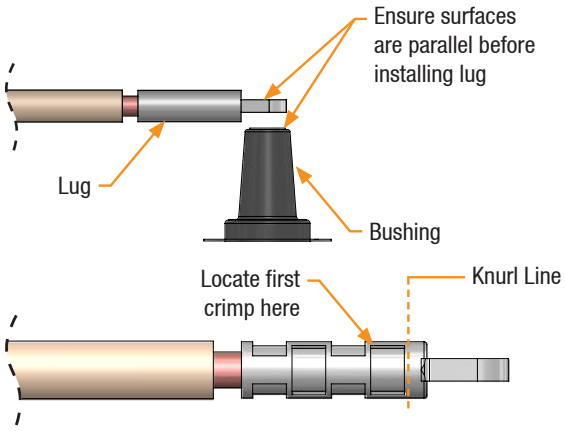

For Range Taking Connectors

A. Refer to lug bag for centering ring selection. Install centering ring into barrel opening. Clean conductor of any debris. For aluminum conductor, wire brush and immediately insert lug onto conductor. Slide lug until the conductor is fully seated within the lug barrel.
B. Rotate lug so that spade is parallel to the contact face of the bushing or mating part as shown. Hand tighten shear bolts in tightening sequence shown.
NOTE: Your lug may have fewer bolts, but sequence is tightening bolts closest to cable entrance and working way towards spade.
C. Fully tighten bolts in tightening sequence shown. The bolt will break free when the required torque value is reached.

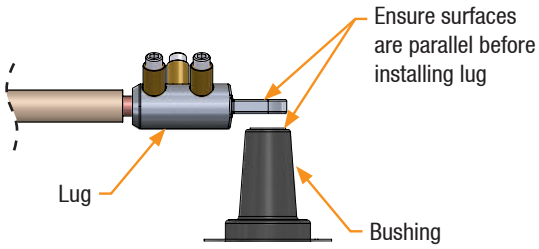

Bolt Tightening Sequence

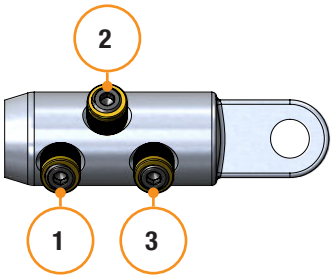

7 Checking Lug

A. After installing lug, confirm distance from lug end to insulation cutback does not exceed dimension shown.

WARNING: Do not exceed maximum dimension shown.

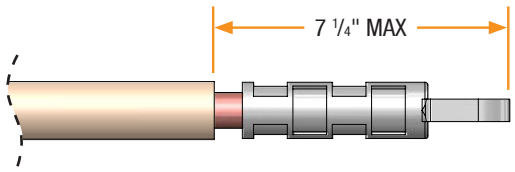

8 Applying Stress Control Mastic

For Strap/Wire Shielded Cable

A. Clean insulation with approved cleaning wipes by wiping from connector to shielding.
B. Apply supplied **stress control mastic** centered over edge of semi-conductive shield cutback. Apply the mastic with light tension so it slightly stretches and completely wraps the cable.

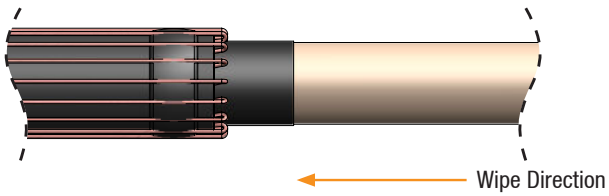

Applied Stress Control Mastic

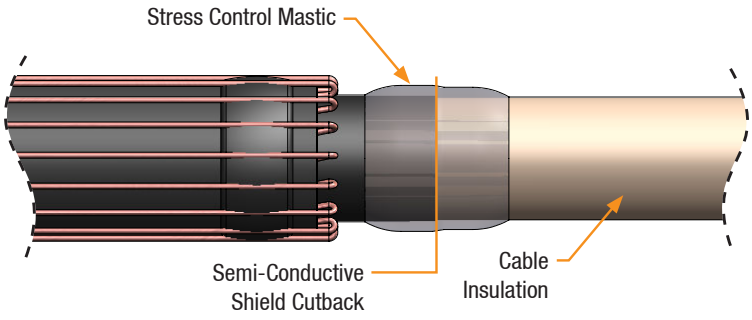

For Metallic Tape/LC Shielded Cable

A. Clean insulation with approved cleaning wipes by wiping from connector to shielding.
B. Remove PVC tape from Step 3.
C. Apply supplied **stress control mastic** centered over edge of semi-conductive shield cutback. Apply the mastic with light tension so it slightly stretches and completely wraps the cable.

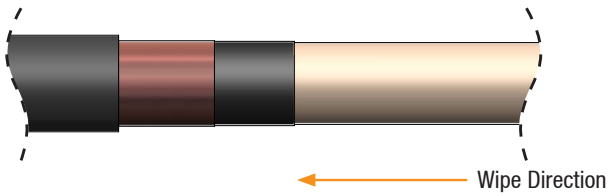

Applied Stress Control Mastic

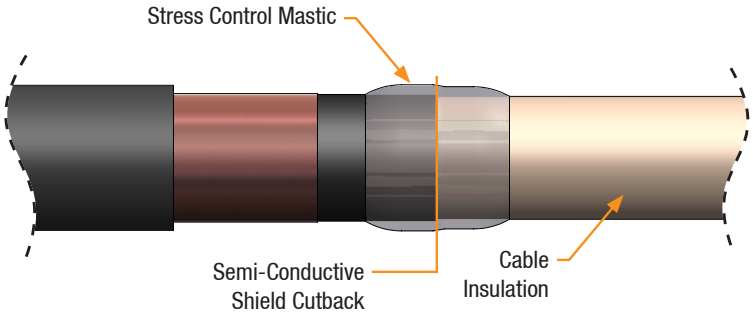

9.1 Applying Grease

A. Apply grease over exposed cable insulation and stress control mastic as shown. Use only supplied or approved silicone grease.

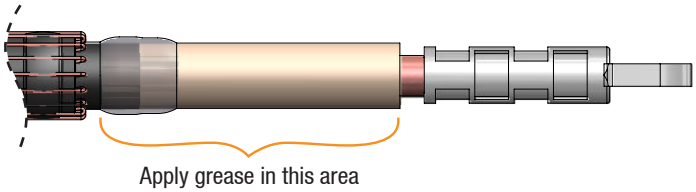

9.2 Installing CS8

A. Install CS8 onto cable until the lug is fully seated inside the housing.

WARNING: Confirm the lug has fully seated into housing as shown.

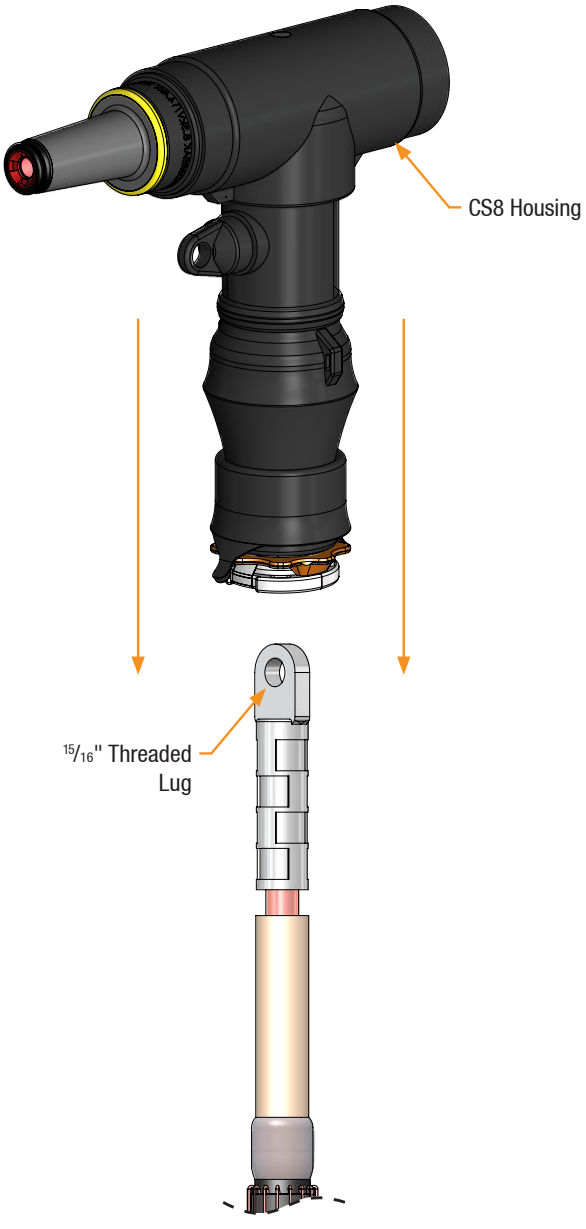

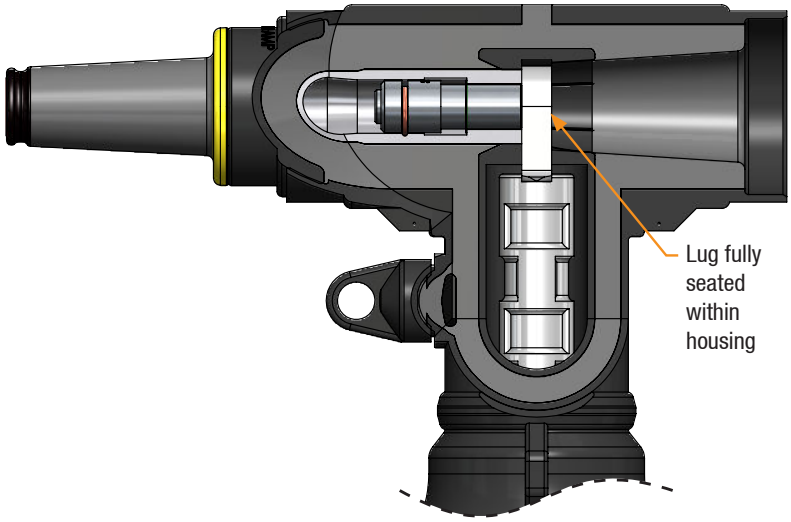

9.3 Inserting Hex Tool

A. Insert Hex tool (P620AT or equivalent $^{5}/_{16}$" hex tool) through loadbreak interface and engage fastener.
B. Slide fastener into forward position through lug hole (as shown in detail view).
C. Lift up on the CS8 body to confirm that the assembly is locked with the fastener through the lug hole. If the body lifts off the cable, the fastener must be retracted and re-installed. For detailed instructions contact the factory.
D. Measure distance from the edge of the core to the jacket cutback. Note the measured distance, this will confirm correct positioning after mounting.



WARNING: Fastener is factory-installed in a retracted position. The Fastener must be stroked into forward position. The female threaded end of Fastener will then extend into the $^{15}/_{16}$" Threaded hole of the Lug.

WARNING: Confirm that fastener goes through lug hole as shown below.

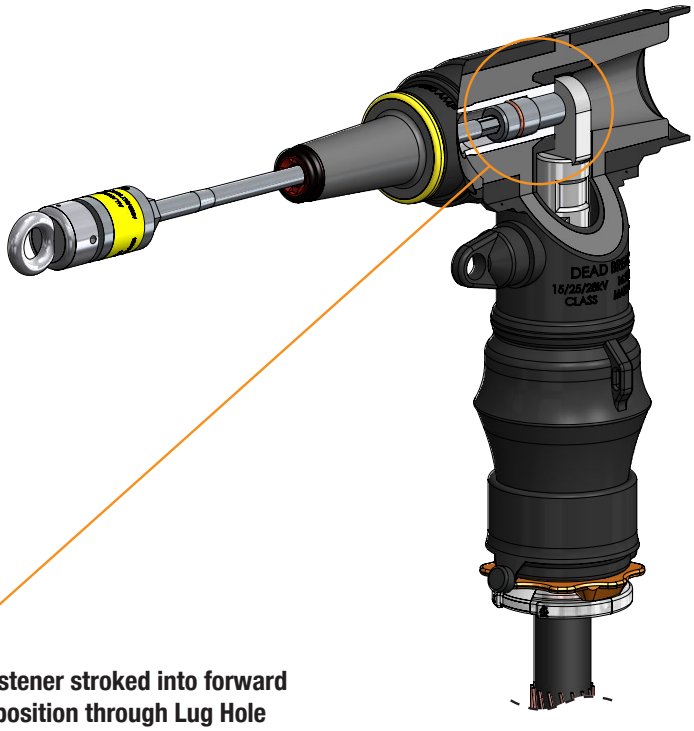

Fastener in the retracted position

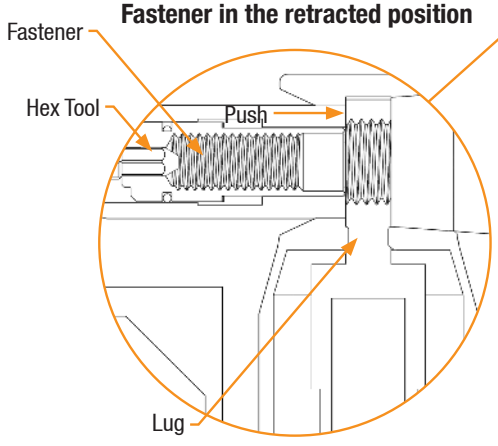

Fastener stroked into forward position through Lug Hole

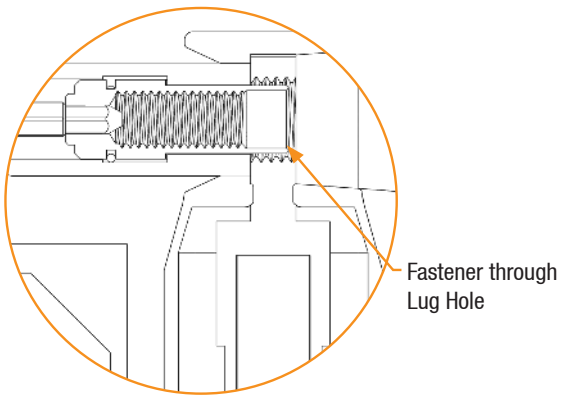

9.4 Mounting CS8

A. Hand-tighten stud into the appropriate mating part or bushing.

WARNING: A standard threaded stud is included in the kit. If the use of an asymmetrical threaded stud is approved, it MUST be installed with longer threaded side facing AWAY from equipment as shown below.

Correct

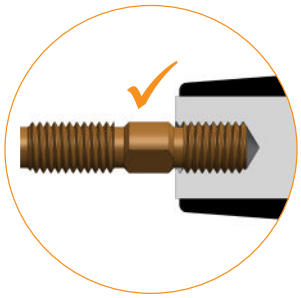

Incorrect

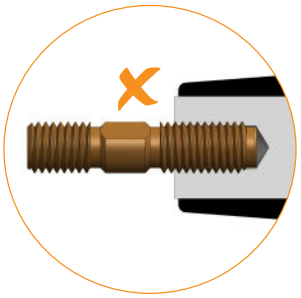

9.4 Mounting CS8 (continued)

B. Clean and lubricate (using supplied or approved silicone grease) deadbreak interface of CS8 and interface of mating part or bushing.
C. Mount CS8 onto mating part, lining up the hole in the lug with the stud on the mating part.
D. Rotate tool 2-3 turns to start thread engagement. Torque fastener to 20ft-lb (P620AT Tool has built in 20ft-lb torque limiter.)

CHECK: Confirm that measured distanced from Step 9.3 has not changed more than 3/4". If cable has shifted assembly must be re-done. Contact the factory.

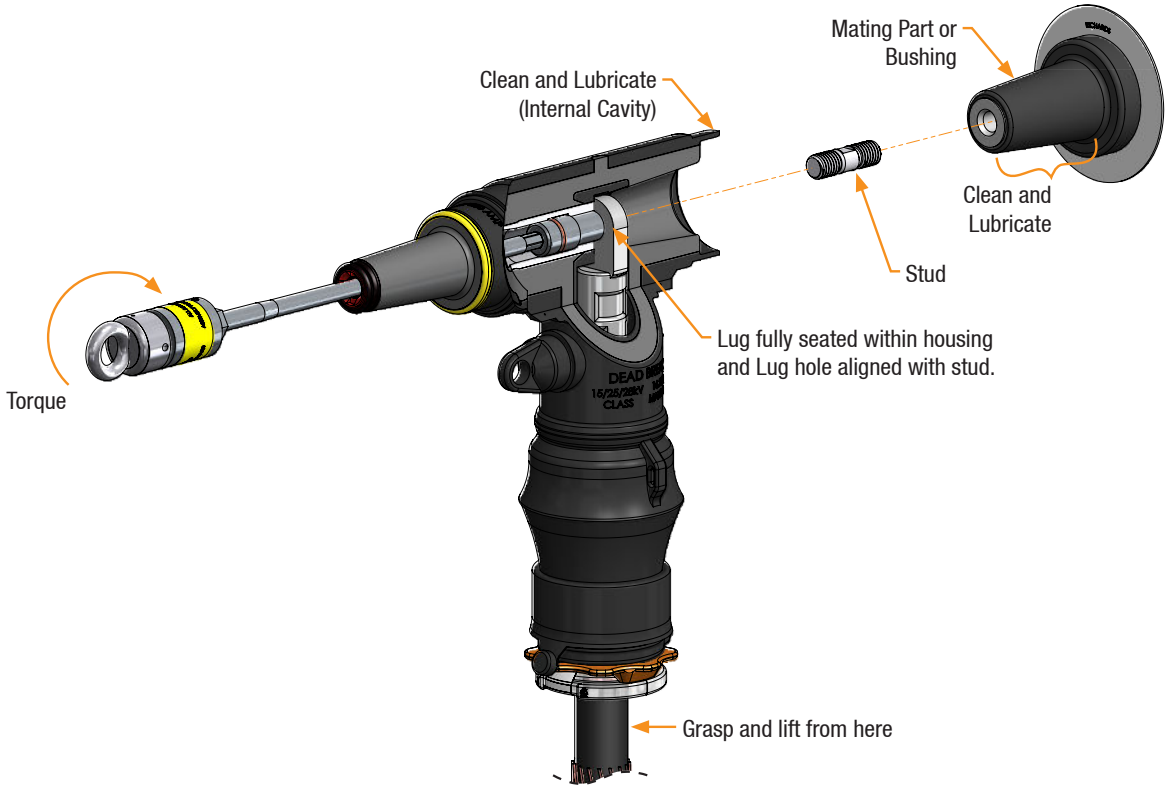

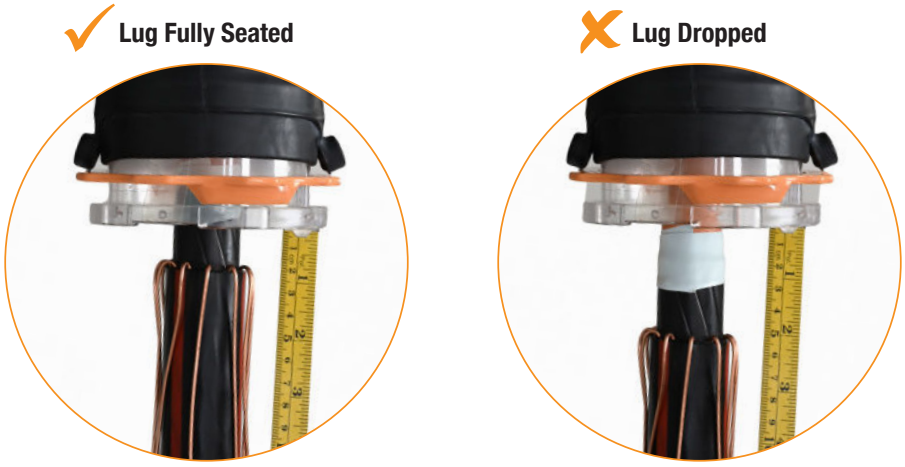

10.1 Removing Core

A. Grasp removal ring. Push ring against core flange and twist so that cutting teeth break tape on both sides. Check that tape is broken.
B. **To remove core by hand:** Proceed to Step D.
To remove core using P6AT-CS2 Tool: Insert one half of tool between removal ring and core flange. Pry core slightly away from housing.
C. Insert second half of core removal tool between removal ring and core flange. Press handles inwards to eject core.
D. Completely remove core from rubber housing by hand. **DO NOT** twist core while removing.
E. Separate core into two halves and clip any plastic rings that remain on cable.

A

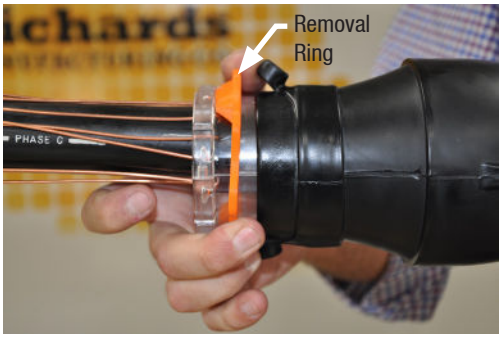

B

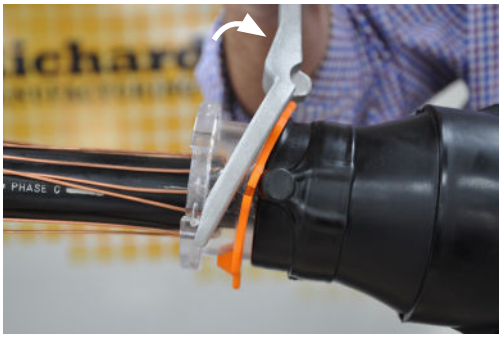

C

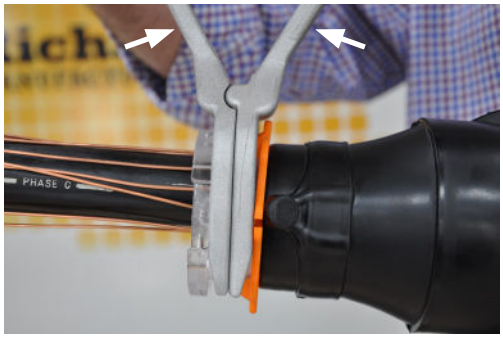

D

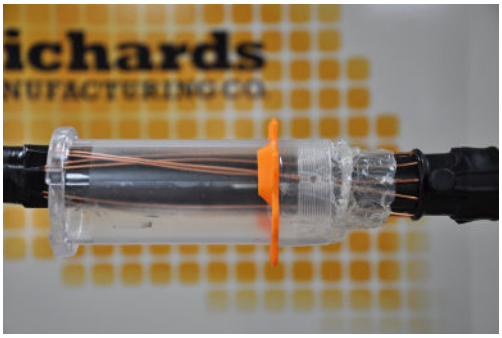

10.2 Preparing Metallic Shield

For Strap/ Wire Shielded Cable

Go to Step 11

For Metallic Tape/LC Shielded

A. Install **jacket mastic** on cable jacket aligned with jacket cutback.
B. Wrap tinned copper braid around exposed metallic shield.
C. Align edge of solder block with jacket cutback.
D. Secure copper braid 3” back from end of jacket mastic with zip tie or binding wire.
E. Unwind constant force spring over wrapped copper braid as shown.
F. Tighten constant force spring by hand and wrap two layers of PVC tape (in direction of spring) to secure.
G. Press solder block into jacket mastic.

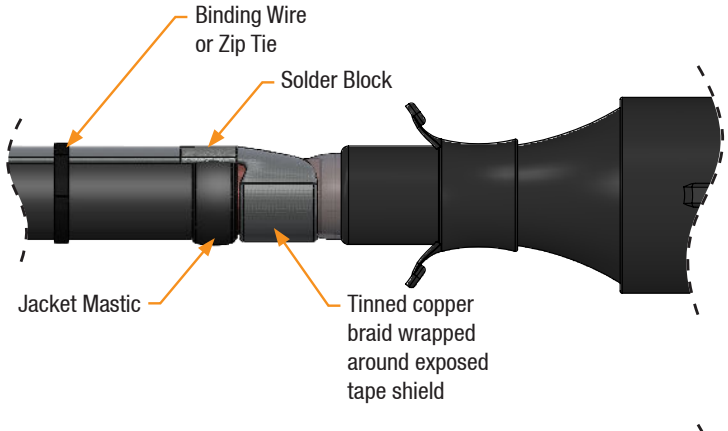

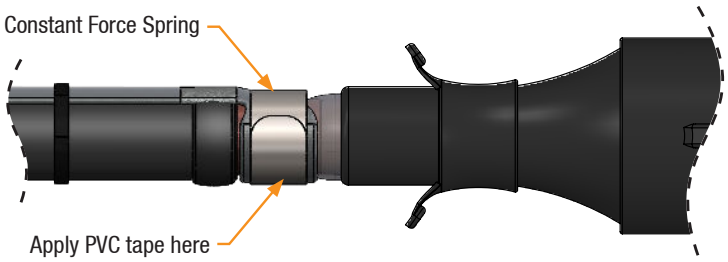

11 Applying Sealing Mastic

For Strap/Wire Shielded Cable

A. Apply **sealing mastic** as close as possible to folded back jacket seal while maintaining complete overlap of previously applied jacket mastic.

NOTE: Sealing mastic may or may not overlap stress control mastic.

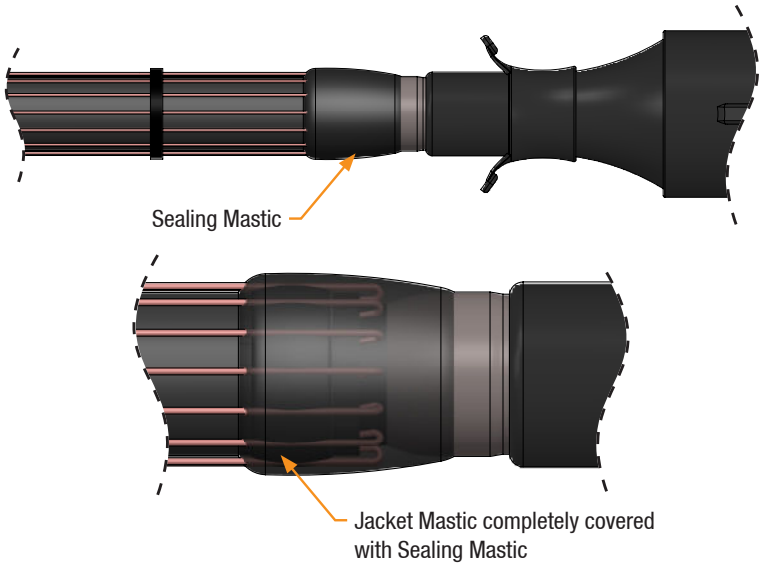

For Metallic Tape/LC Shielded

A. Apply **sealing mastic** as close as possible to folded back jacket seal while maintaining complete overlap of previously applied jacket mastic.

NOTE: Sealing mastic may or may not overlap stress control mastic.

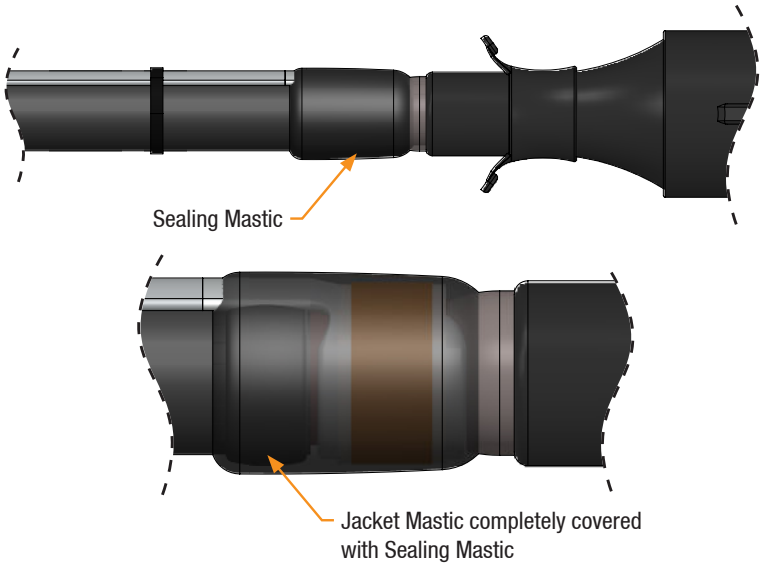

12 Applying Jacket Seal

For Strap/Wire Shielded Cable

A. Apply grease over area as shown. Only use grease supplied with kit or approved silicone grease.

B. Hold both tabs and pull out to completely cover sealing mastics as shown below. Ensure sealing mastic is not dislodged when unfolding seal.

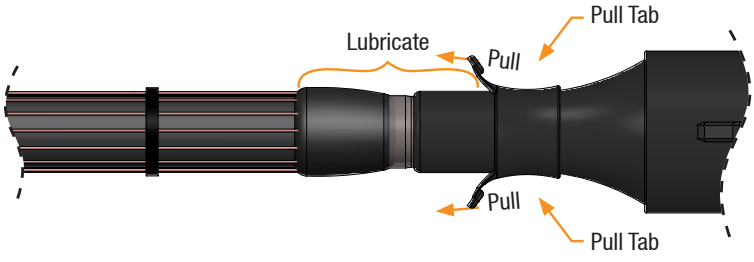

Jacket Seal Installed



For Metallic Tape/LC Shielded

A. Apply grease over area shown below. Only use grease supplied with kit or approved silicone grease.

B. Hold both tabs and pull out to completely cover sealing mastics as shown below. Ensure sealing mastic is not dislodged when unfolding seal.

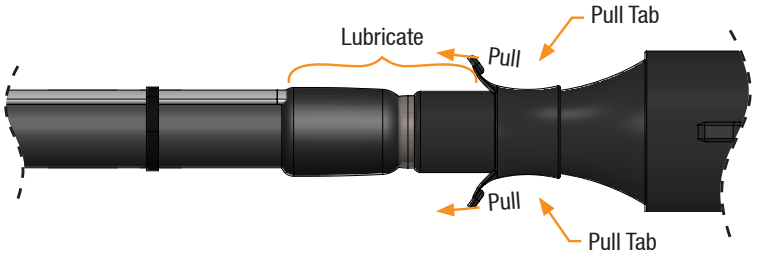

Jacket Seal Installed



13 Installing Mating Component

A. Clean and lubricate (using supplied or approved silicone grease) loadbreak interface of CS8 and interface of insulating cap or mating part.
B. Install mating component per manufacturer instructions. Loadbreak Cap shown as reference.

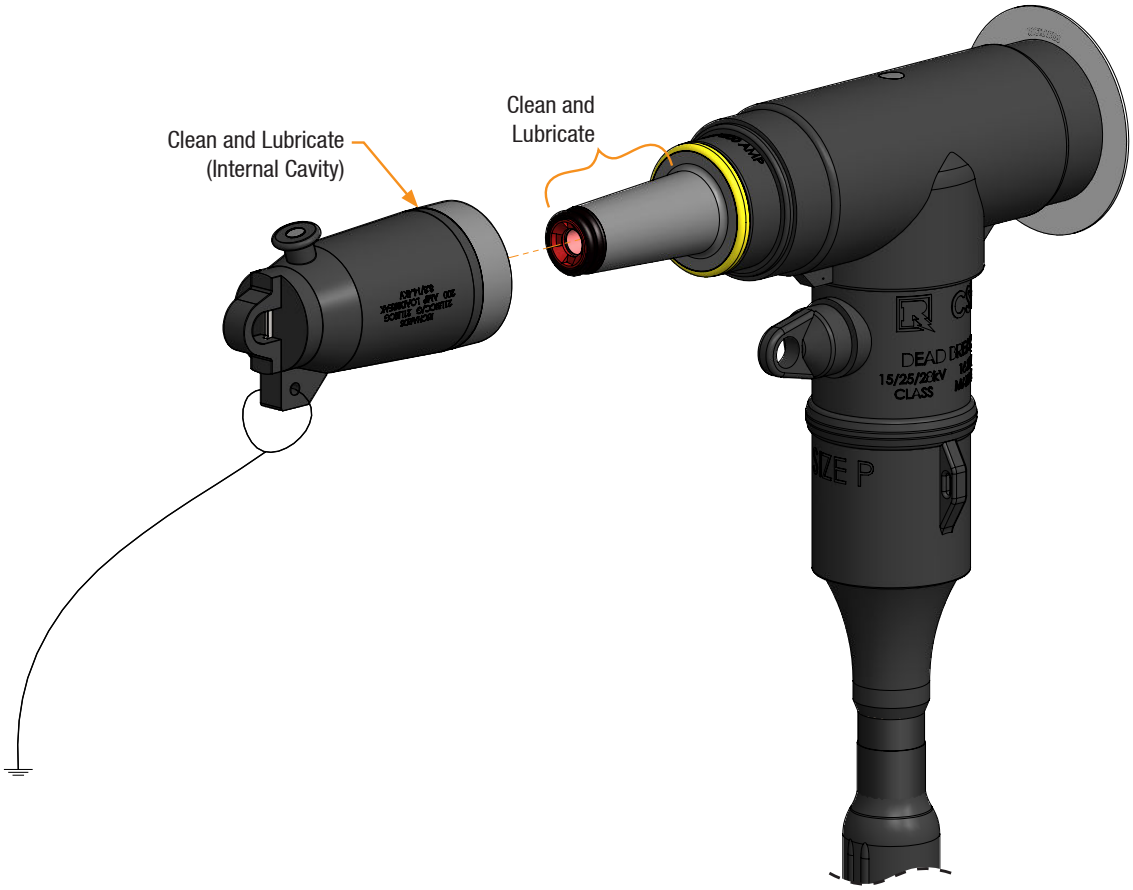

14

Connecting Drain Wires to CS8

For Strap/Wire Shielded Cable

A. Insert one end of a piece of wire (#14 AWG copper or larger) through one of the available grounding eyes and twist to make a small loop. Be sure not to damage grounding eye.
B. Connect other end of wire to shield wires.
C. Ground the cable shield according to appropriate/approved practice.

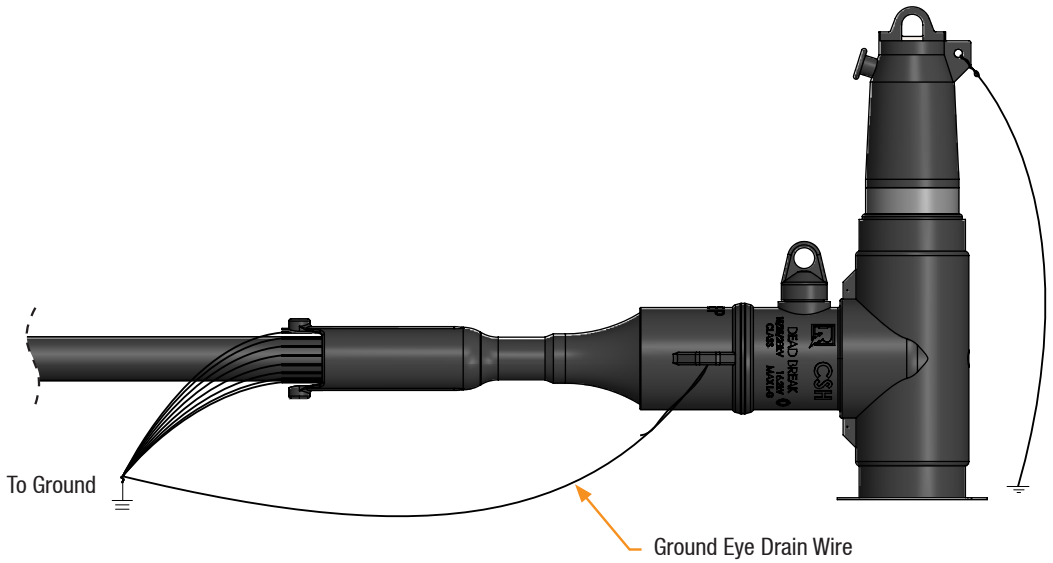

For Metallic Tape/LC Shielded

A. Insert one end of a piece of wire (#14 AWG copper or larger) through one of the available grounding eyes and twist to make a small loop. Be sure not to damage grounding eye.
B. Connect other end of wire to copper braid.
C. Ground the cable shield according to appropriate/approved practice.

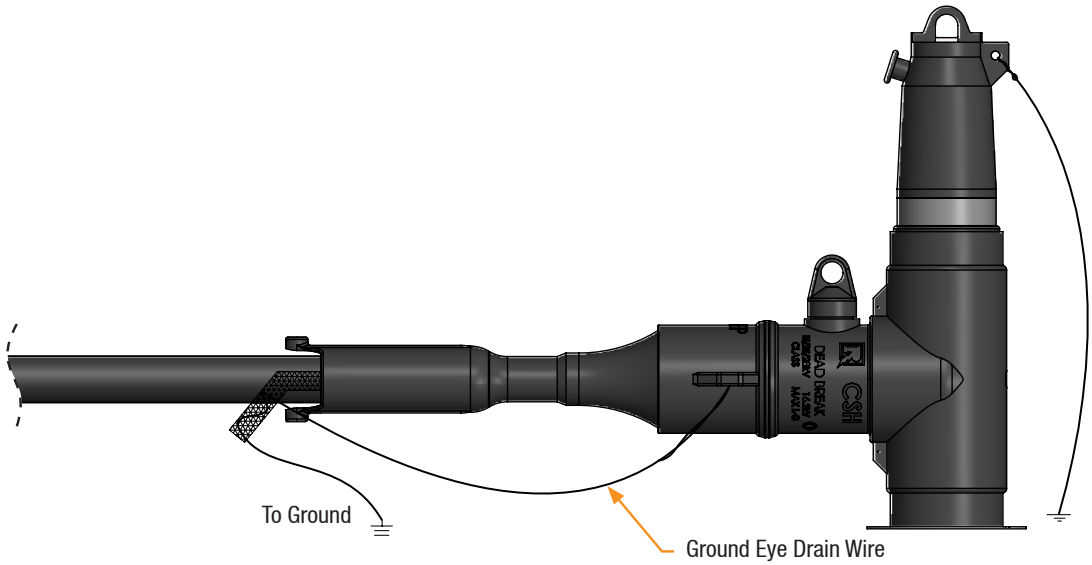

Installation Complete

Richards CS8 or R-800
"G" Fastener Retraction Procedures

The following procedures are intended for use with any Richards "G" style R-800 elbow.
The fastener style can be found on the product packaging and bag supplied within the kit.

Procedure 1: Fastener Stroked Forward Without Lug

- Use this procedure when a G-style fastener has been inadvertently advanced to the forward position before the lug is in place. The procedure safely retracts the fastener so installation can proceed correctly.

Materials required for this procedure:

- (1) 5/8"-11 threaded rod or bolt 8" minimum
- (2) 5/8"-11 nuts

1 Install Nuts

A. Install two nuts on $^{5}/_{8}$"-11 threaded rod and set the nuts back $^{3}/_{8}$" from the end. Snug the two nuts together so they do not move along the rod.

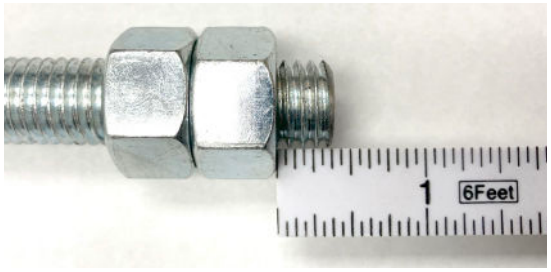

2 Insert Threaded Rod

NOTE: Cutaway R-800 is being shown in this procedure to help communicate the retraction process to the operator.

A. Carefully insert the threaded rod into the R-800 female interface as shown.

WARNING: DO NOT scratch or damage the rubber interface.

The end of the threaded rod will slide into the end of the fastener, and keep the rod aligned with the fastener.

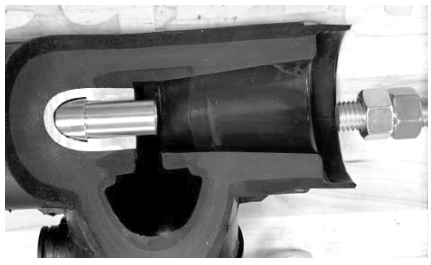

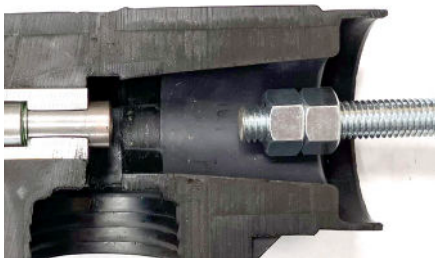

3 Mark Threaded Rod

A. Mark the threaded rod with tape near edge of elbow interface. This is to help gauge once the fastener has completely retracted $^1/_2$".

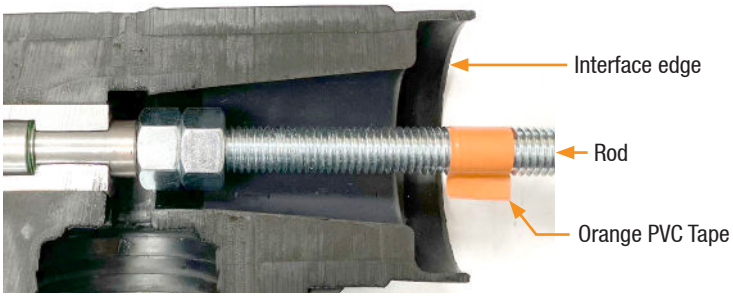

4 Tap and Remove Threaded Rod

A. Tap the outside end of the threaded rod until the fastener has retracted $^1/_2$" back to the original position.



B. The fastener is fully recessed when the nut sits flush against the inner aluminum contact, as shown. Carefully remove the threaded rod. Do not scratch any part of the rubber interface. Proceed with installation as normal.

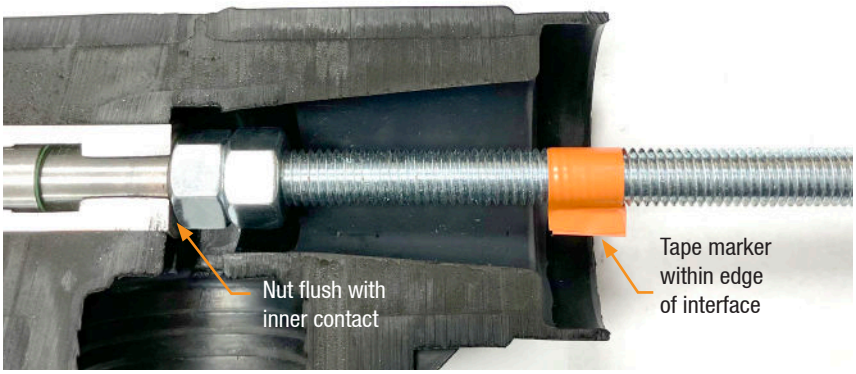

Procedure 2: Fastener Stroked Through Lug Hole

- Use this procedure when a G-style fastener has been advanced forward position with the lug in place. The procedure safely retracts the fastener so the lug can be removed from the elbow.

Materials required for this procedure:

- (1) $^{5}/_{8}$"-11 threaded rod or bolt 8" minimum
- Supplied or approved hex tool

1 Insert Threaded Rod

NOTE: Cutaway R-800 is being shown in this procedure to help communicate the retraction process to the operator.

A. Carefully insert the threaded rod into the R-800 female interface as shown.

WARNING: DO NOT scratch or damage the rubber interface.

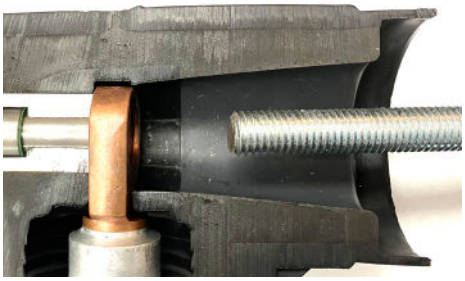

B. Fully thread rod into fastener until it bottoms out.

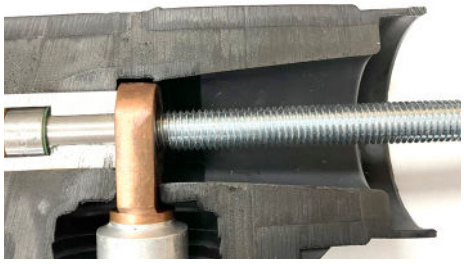

2 Mark Threaded Rod

A. Mark the threaded rod with tape near edge of elbow interface. This is to help gauge once the fastener has completely retracted $^{1}/_{2}$".

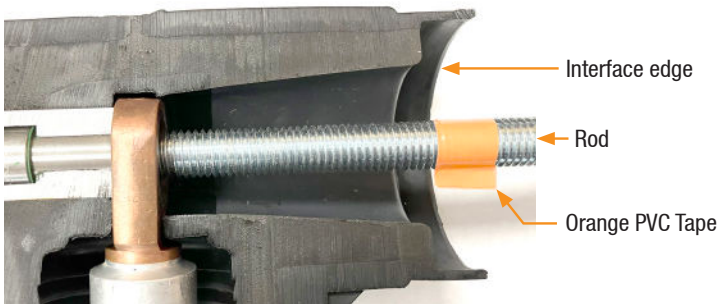

3 Tap and Remove Threaded Rod

A. Tap the outside end of the threaded rod until the fastener has retracted $^1/_2$" back to the original position.

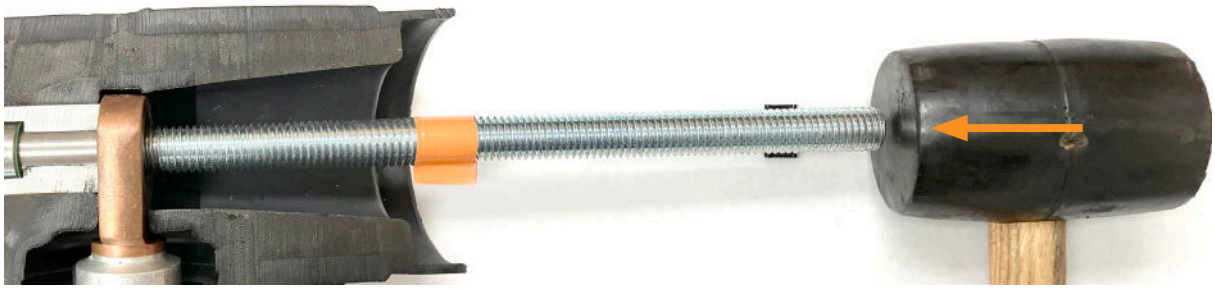

B. Insert P6AT or equivalent tool into loadbreak interface. Unthread rod until it is free from the fastener. Carefully remove the threaded rod. Do not scratch any part of the rubber interface. Proceed with installation as normal.

